Navy KA 190

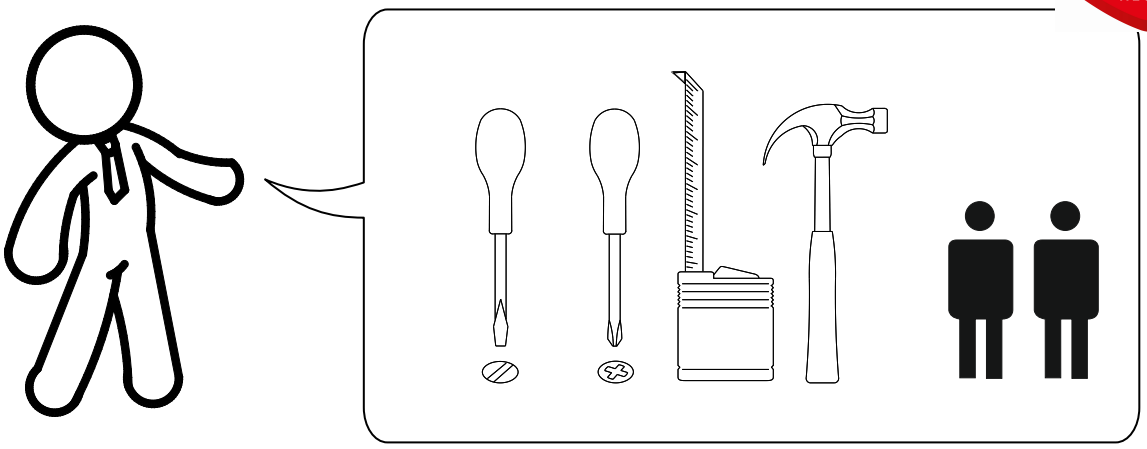

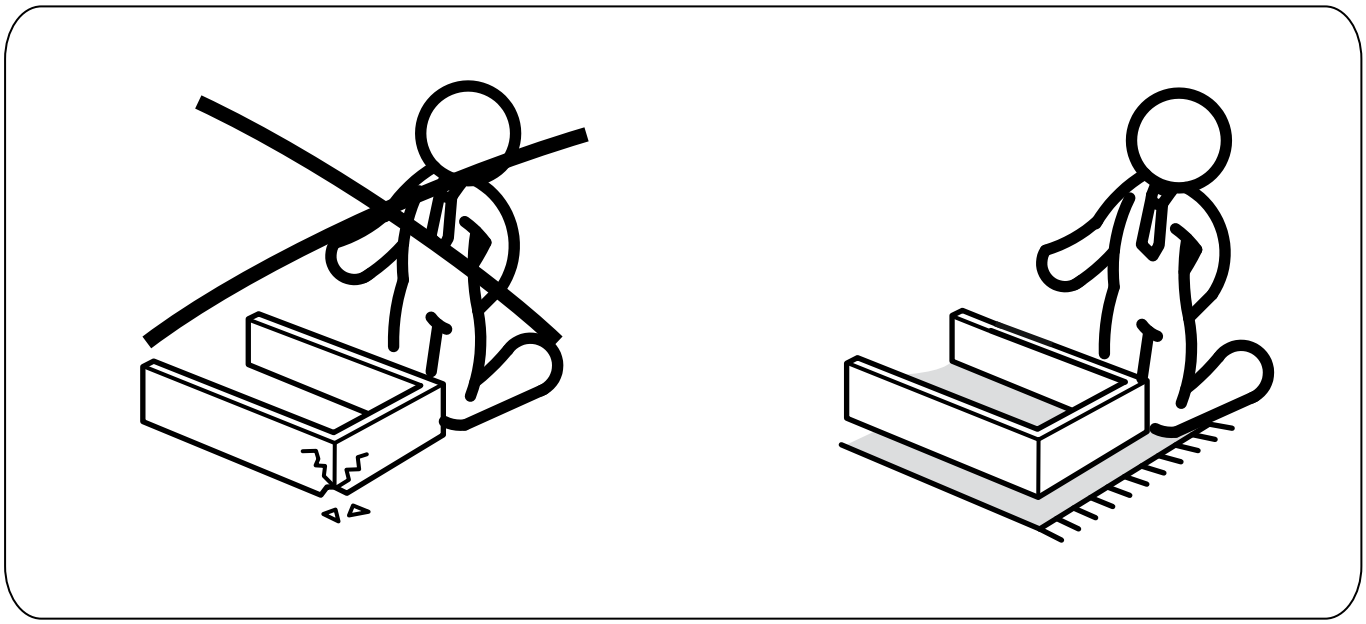

1	1800**	896**	1
Legs	762	904/50	2
Support	1800	50/50	2

2.09	2.10	2.11	1.70
M6x20mm	M6x12x1.6mm	6mm	5x40mm
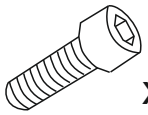 x8	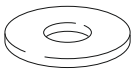 x8	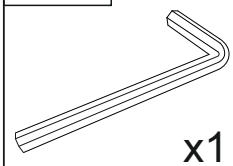 x1	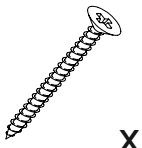 x12

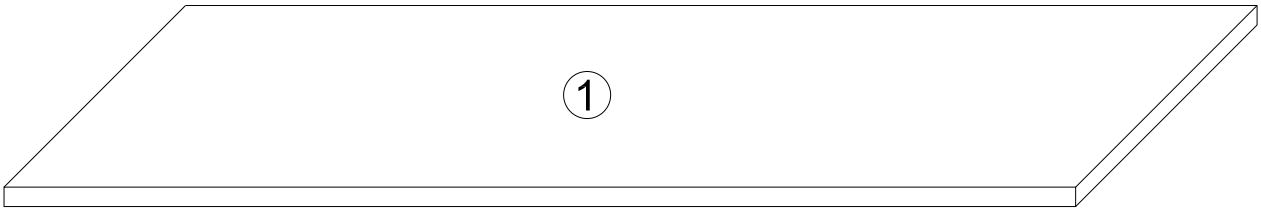

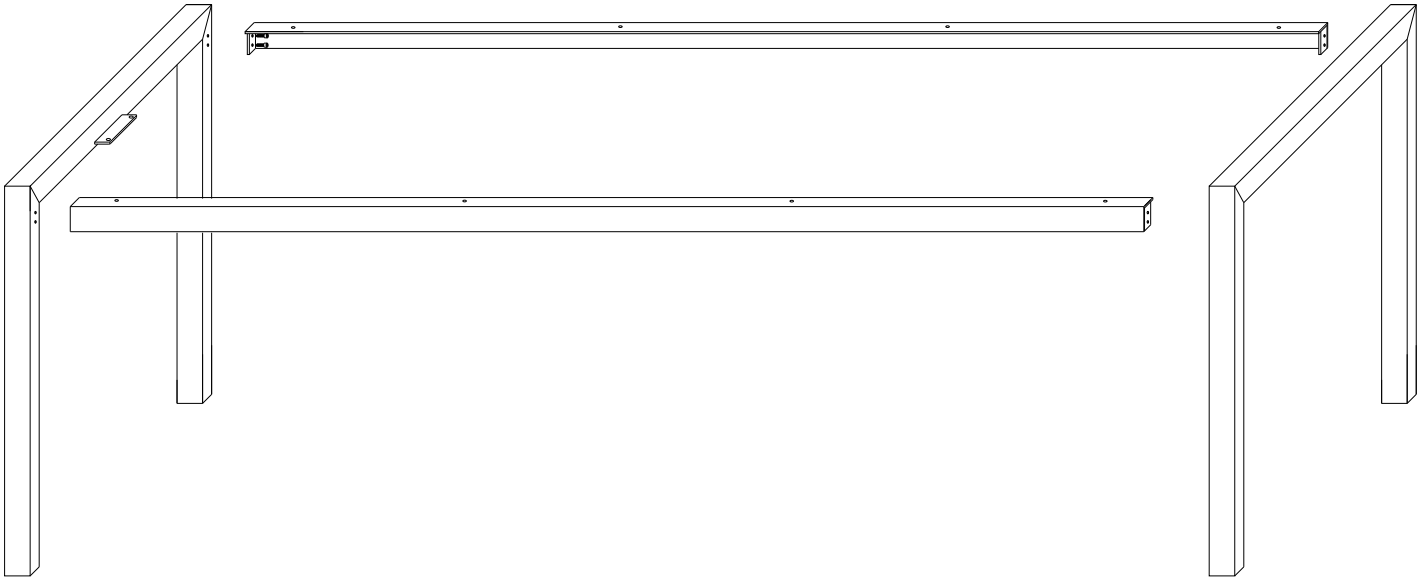

1

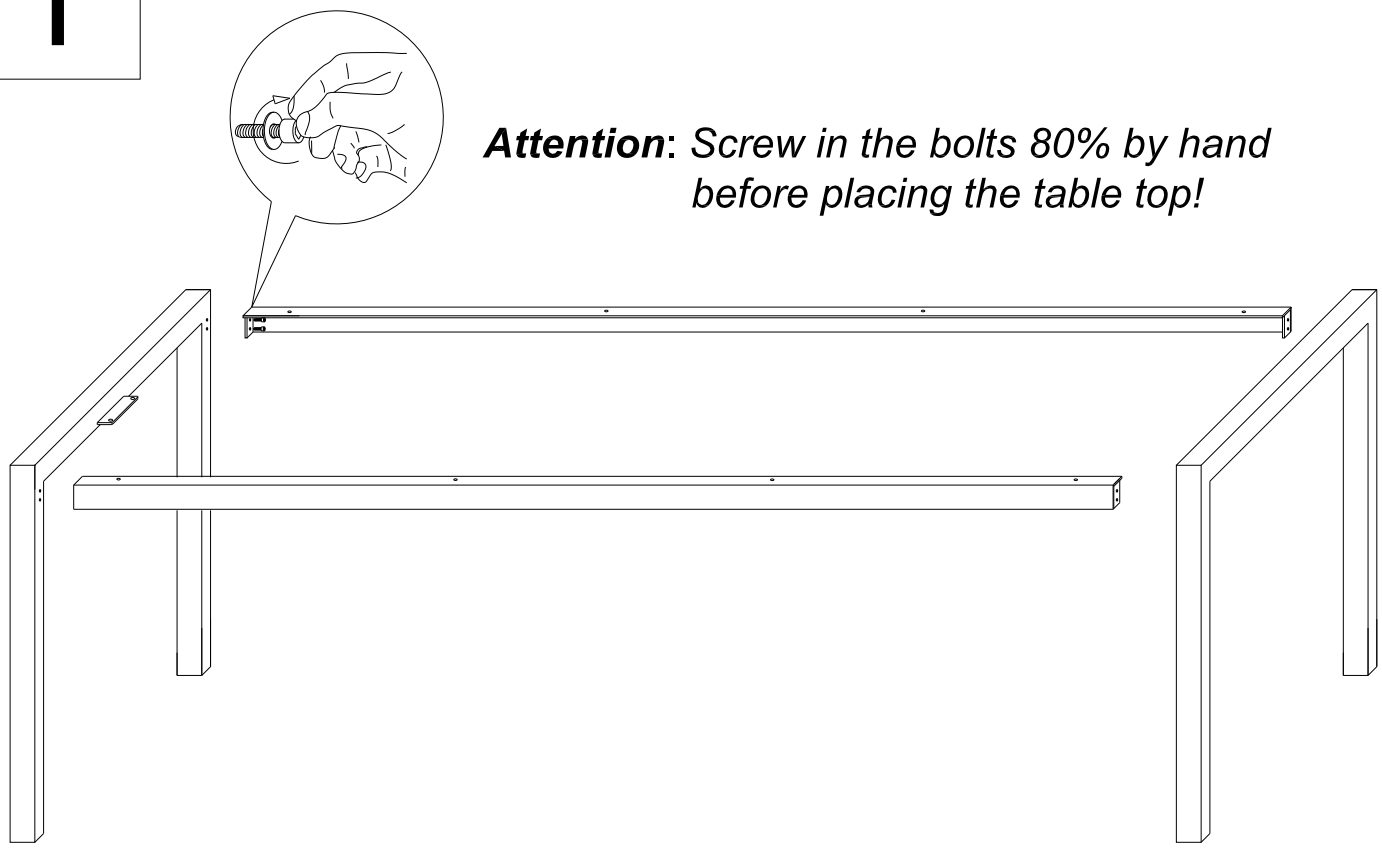

Attention: *Screw in the bolts 80% by hand before placing the table top!*

2

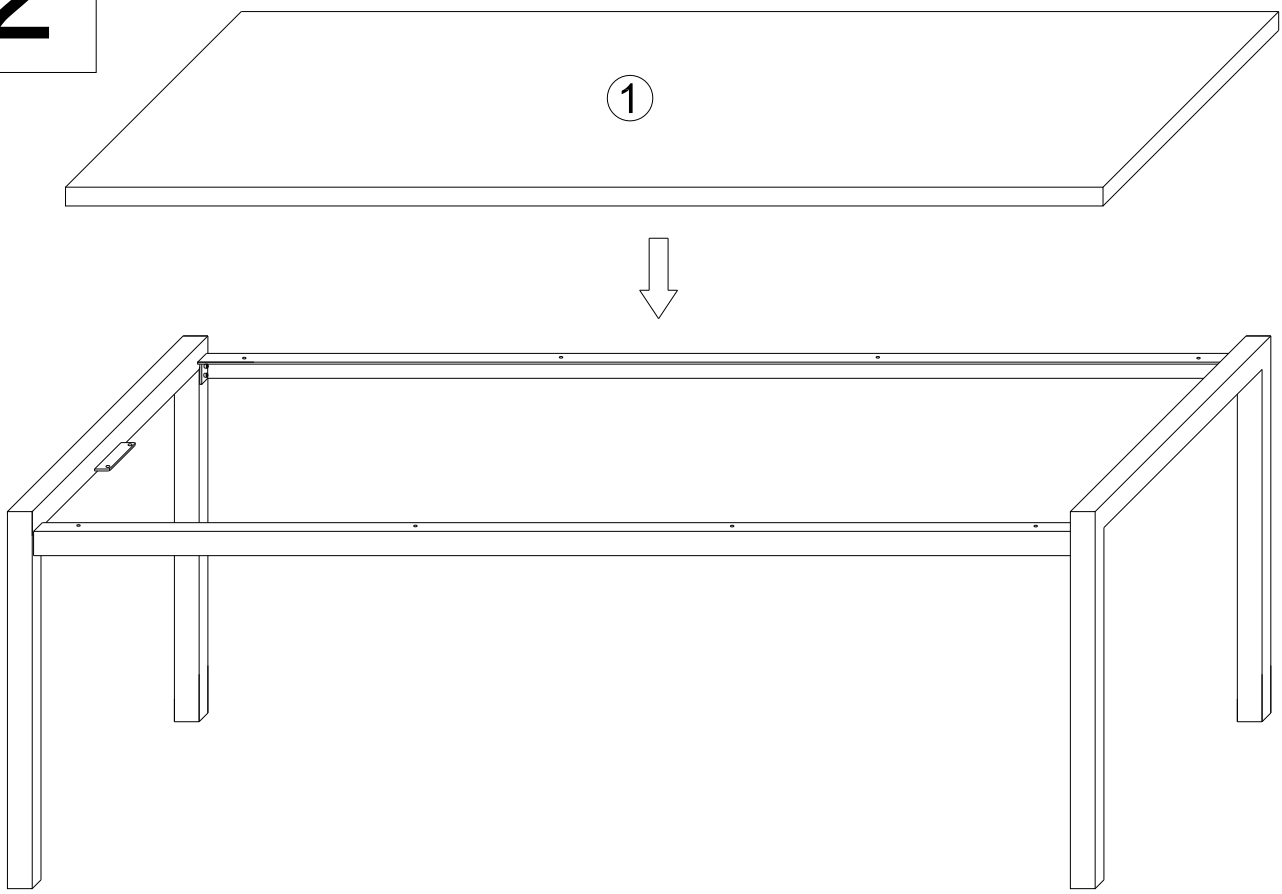

3

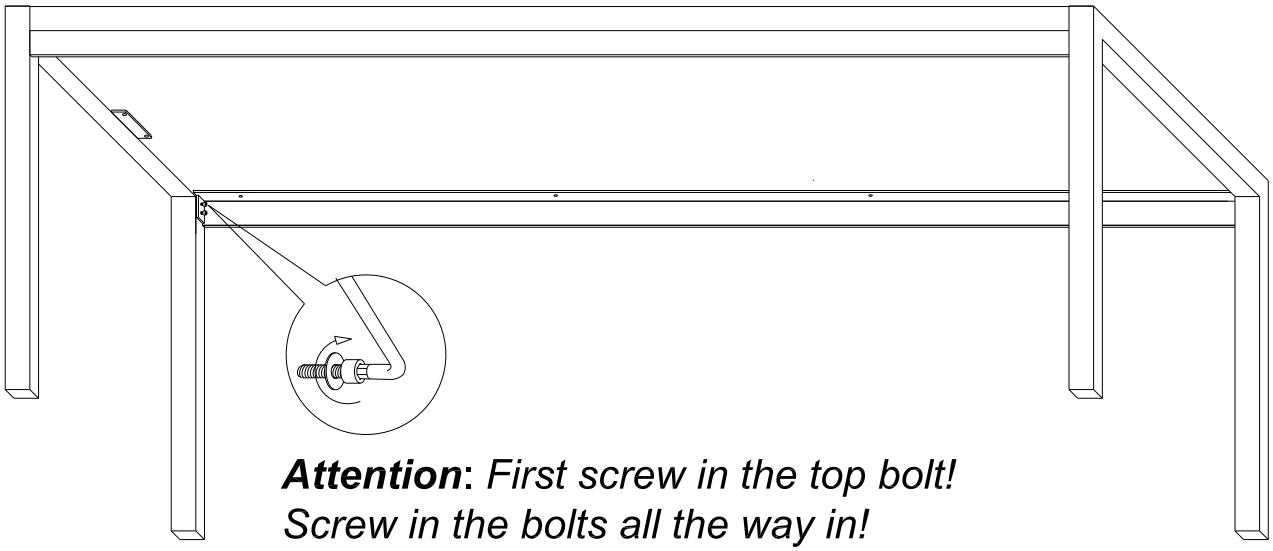

Attention: *First screw in the top bolt!*
Screw in the bolts all the way in!

4

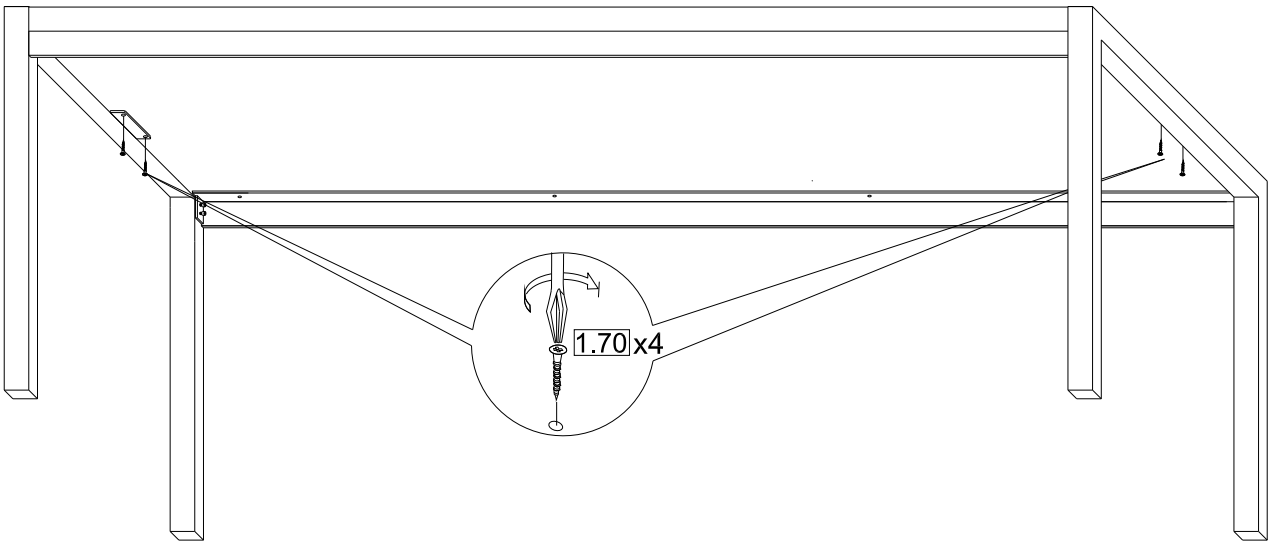
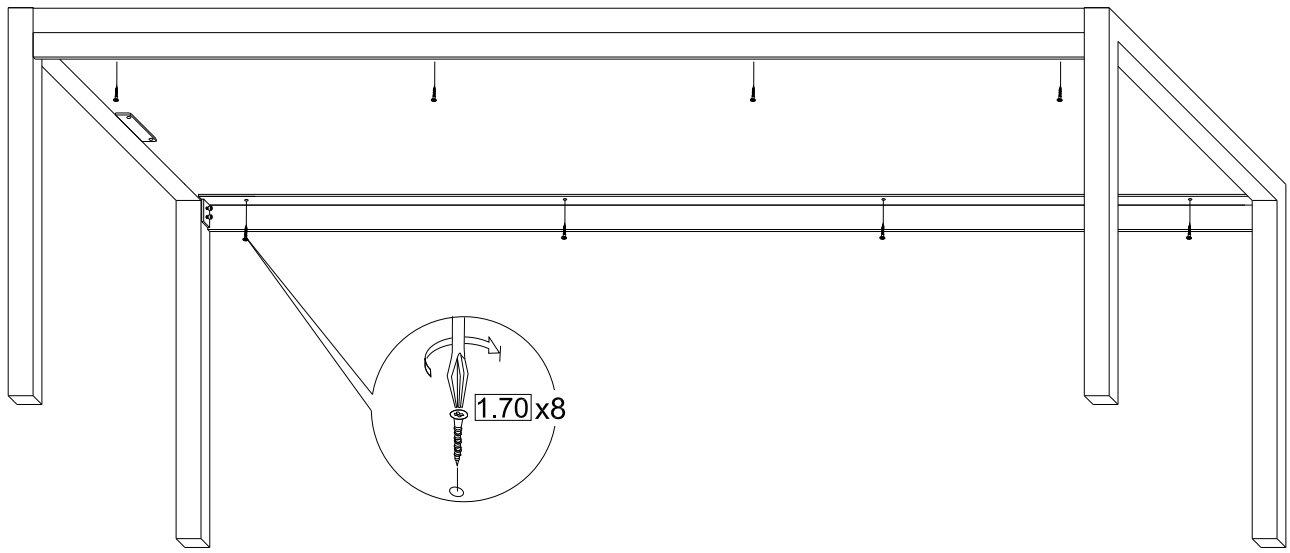
5