Navy Ex2

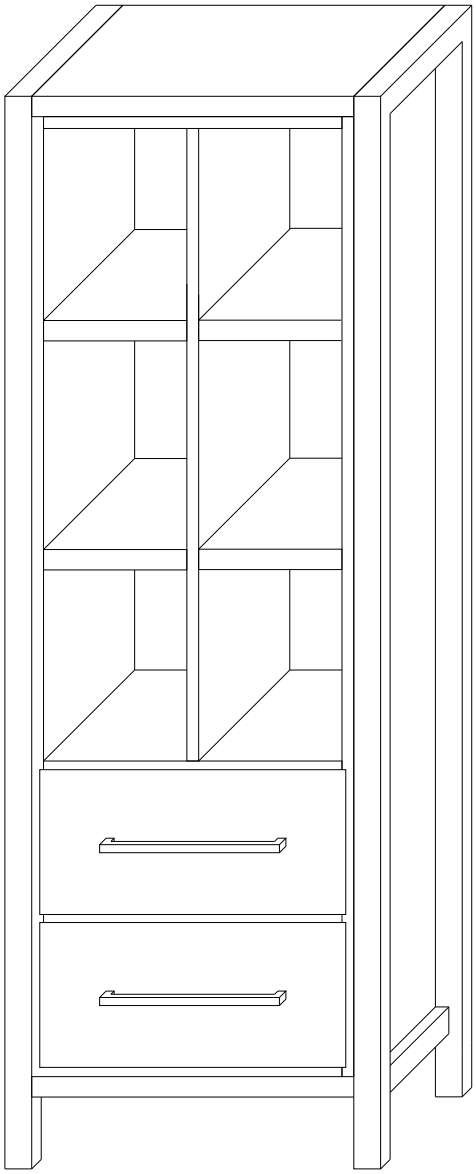

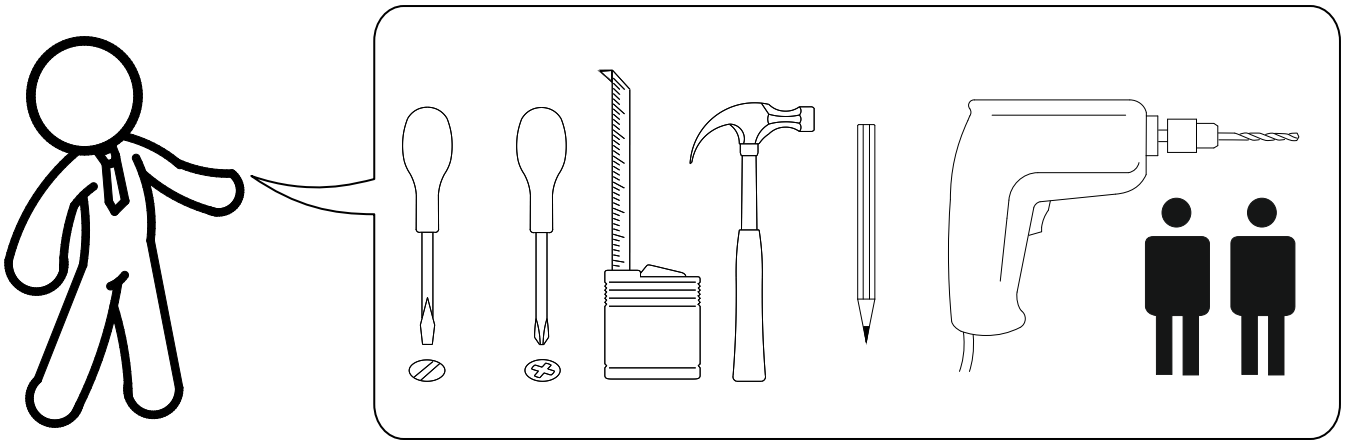

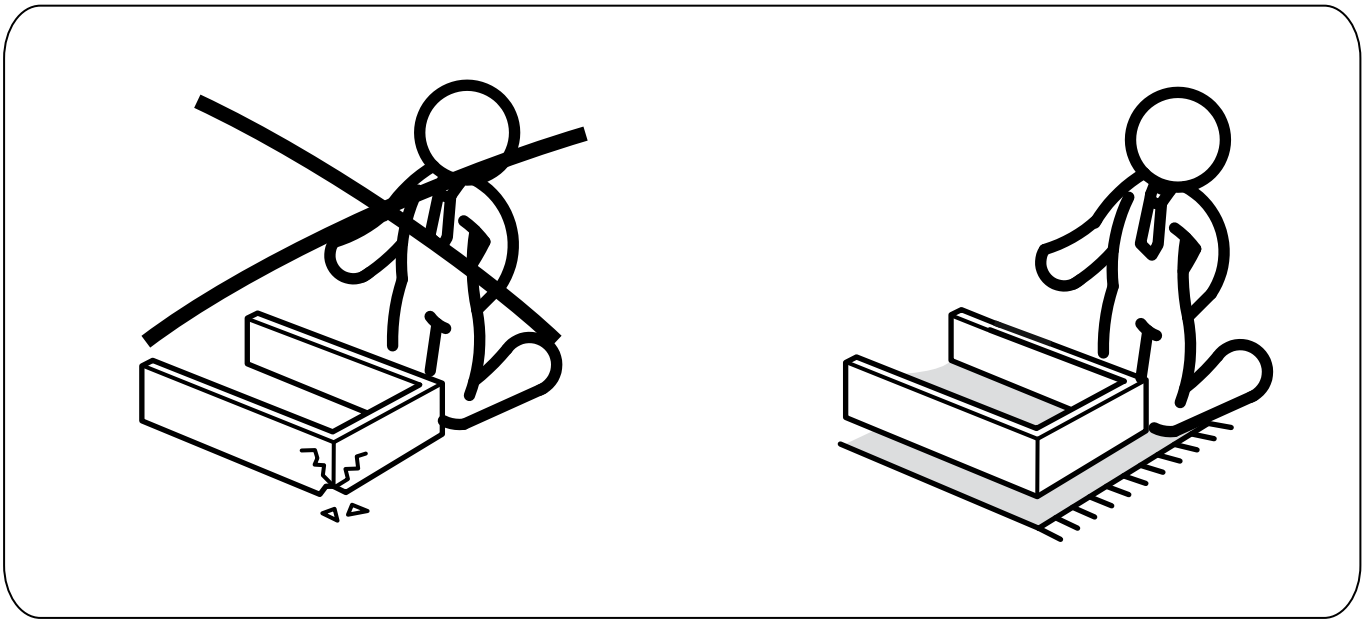

1	600**	472**	1
2	600**	472**	1
3	570**	270**	2
4	267*	417	4
6	400*	120	2
7	400*	120	2
8	499*	120	2
14	1790**	444	1
15	1790**	444	1
16	556**	444	1
17	1227**	444	1
18	556*	68	2
19	267*	68	2
20	1215	277	2
21	573	282	2
22	509	395	2
23	560		1
Legs	2000	480/50	2

1.17 x15	1.16 x15	1.14 x42	1.32 x17	1.10 gray 400mm x2	
2.05 x4	1.70 5x40mm x6	1.5 3.5x16mm x16	1.6 x1	2.02 x16	1.98 x4
1.97 6.3x11mm x17	2.06 160mm x2		2.07 22mm x4	1.7 x15	2.04 L-55mm M-6mm x4
1.58 60mm x2	1.49 3,5x30mm x2				

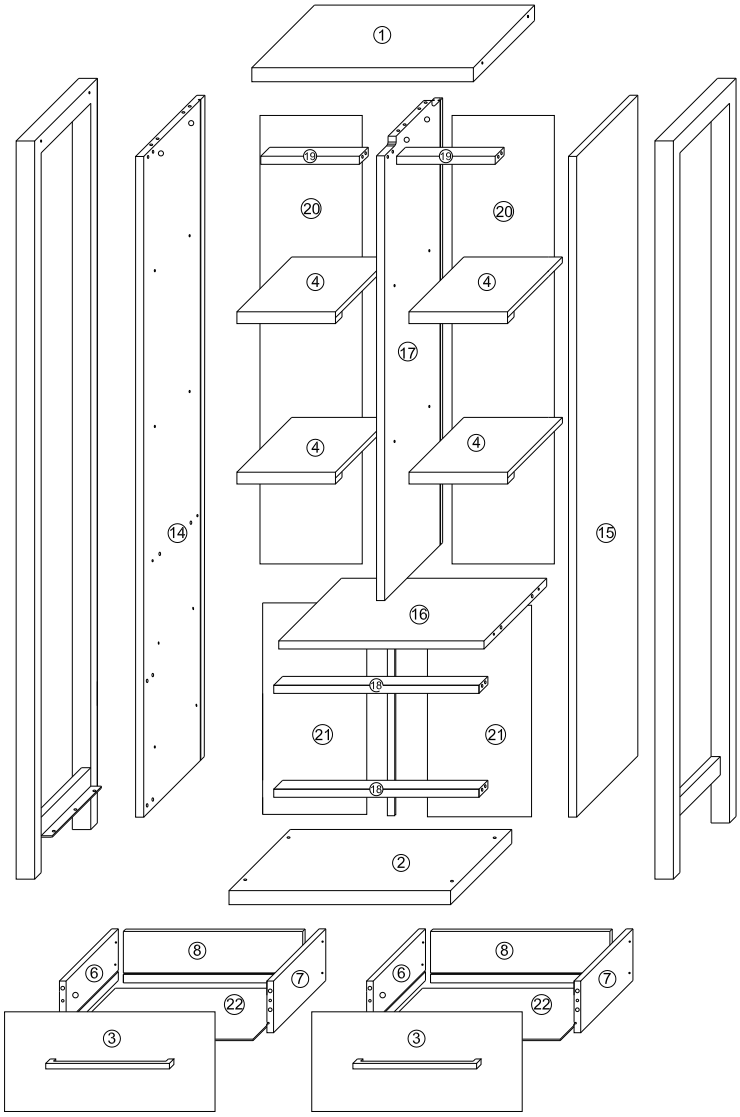

1

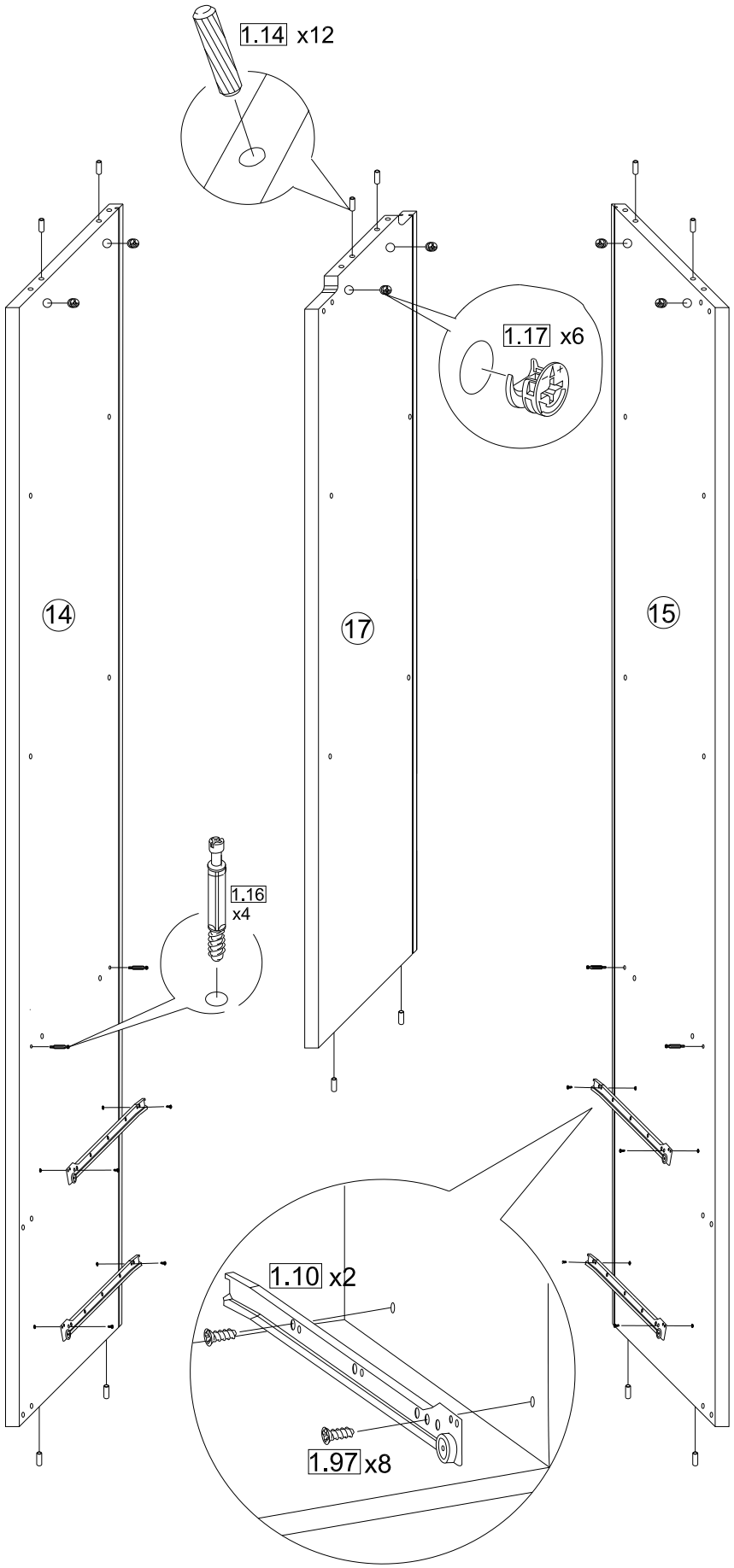

2

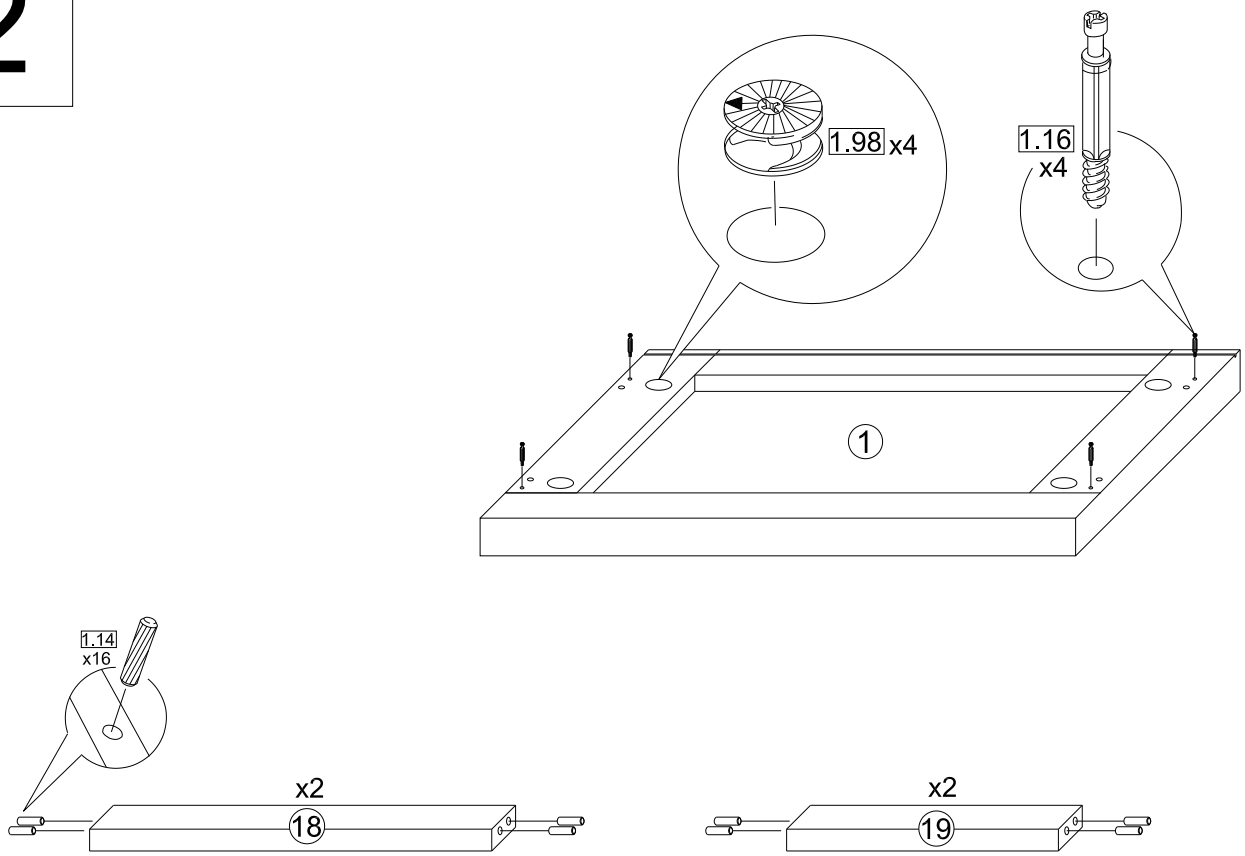

3

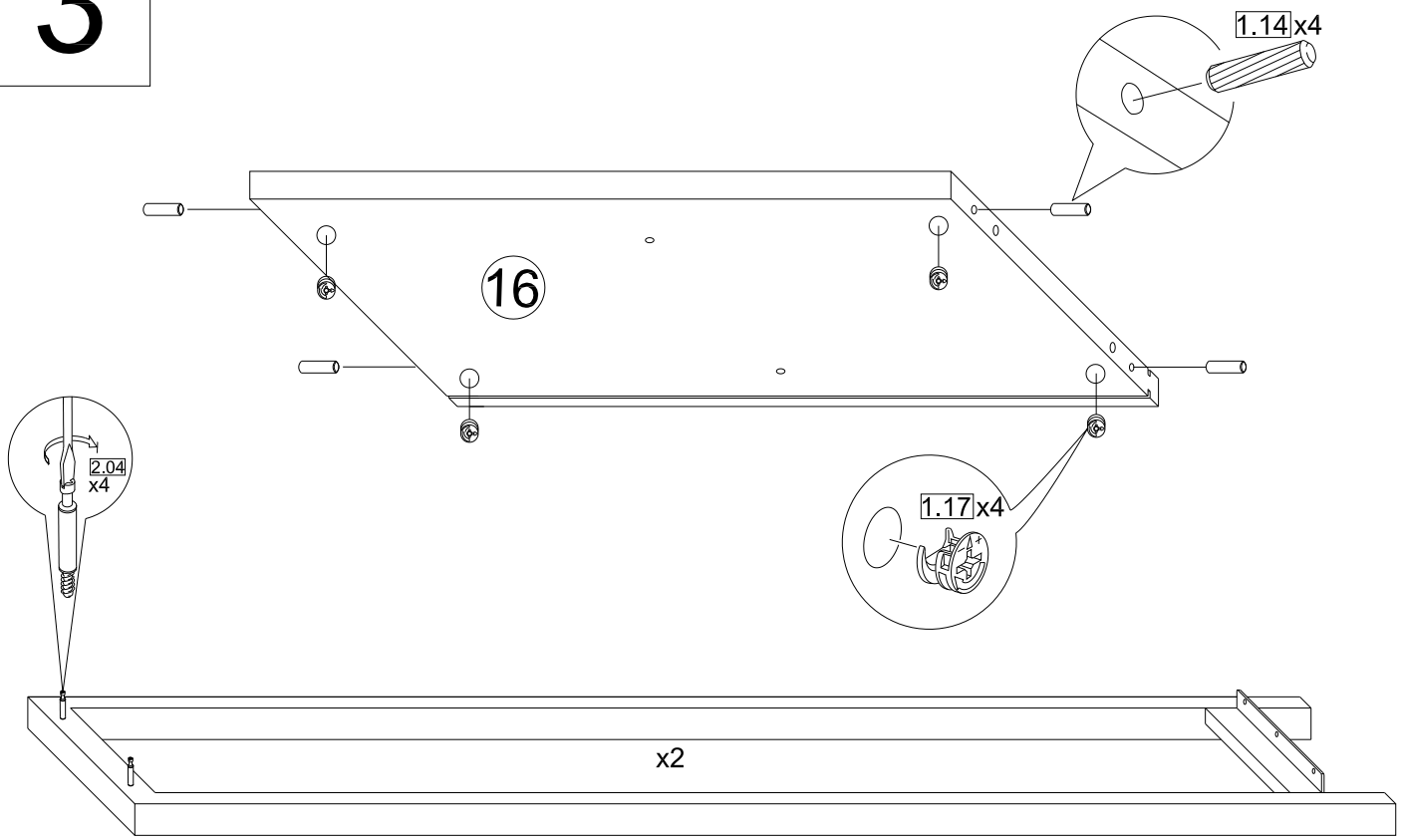

4

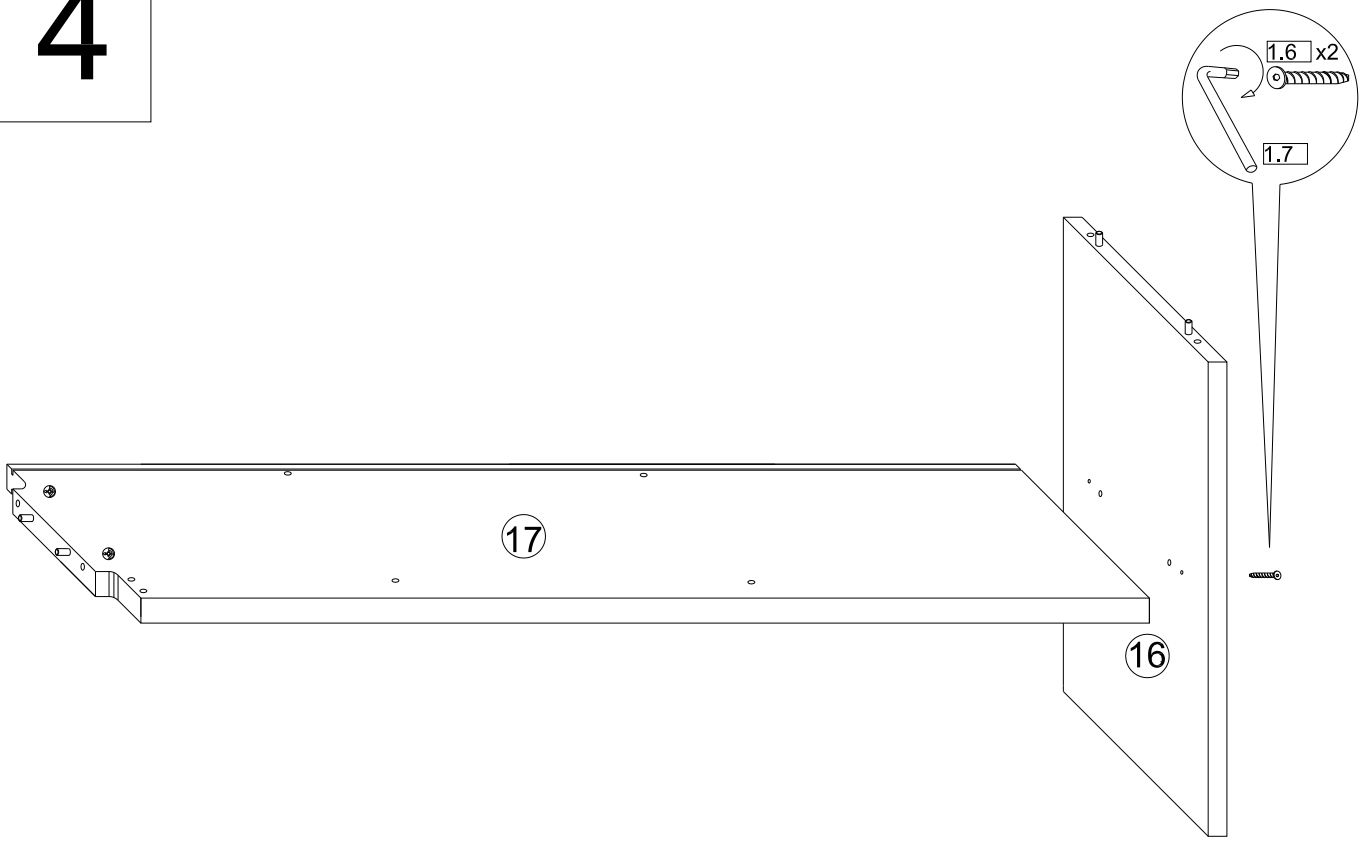

5

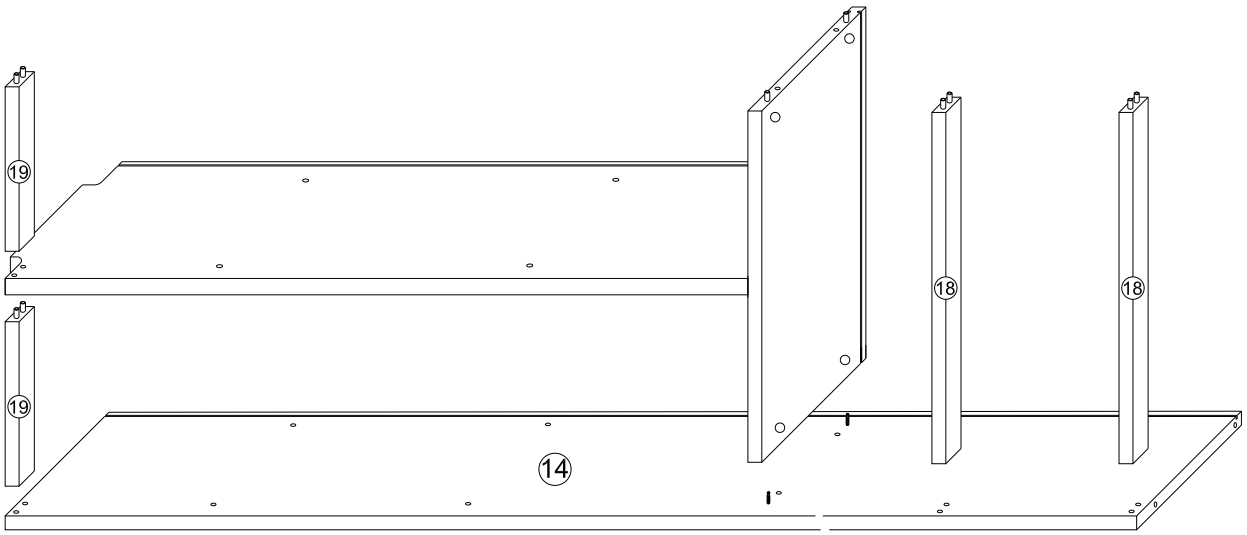

6

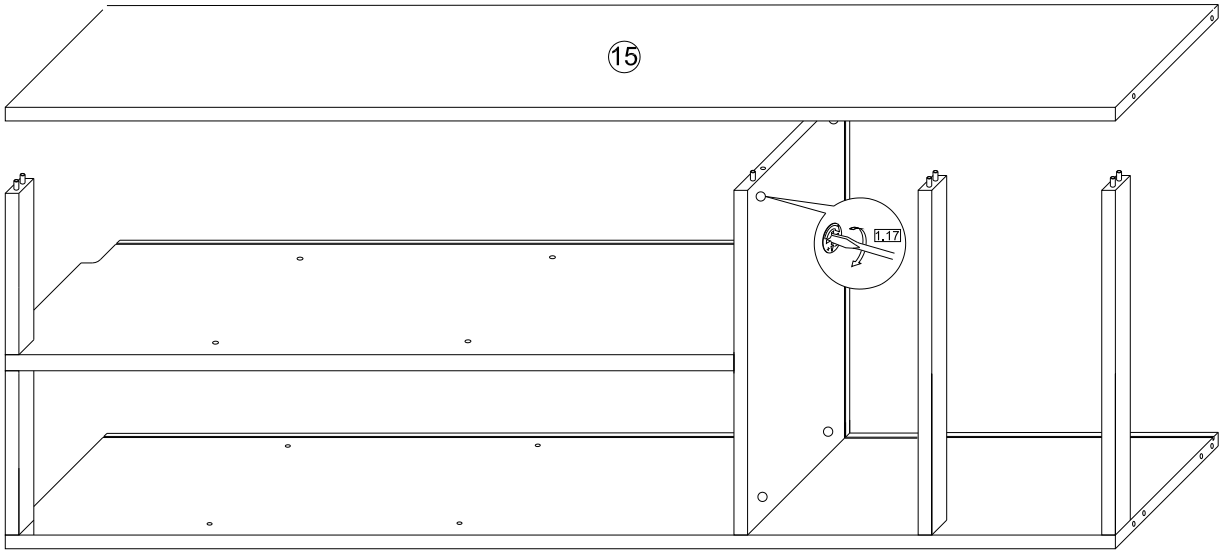

7

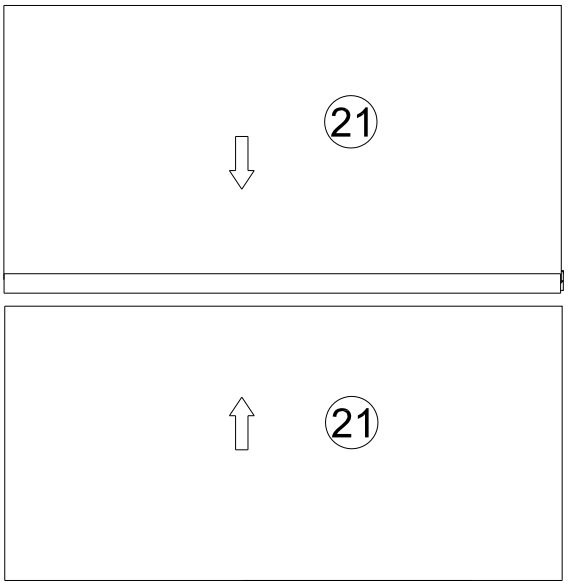

8

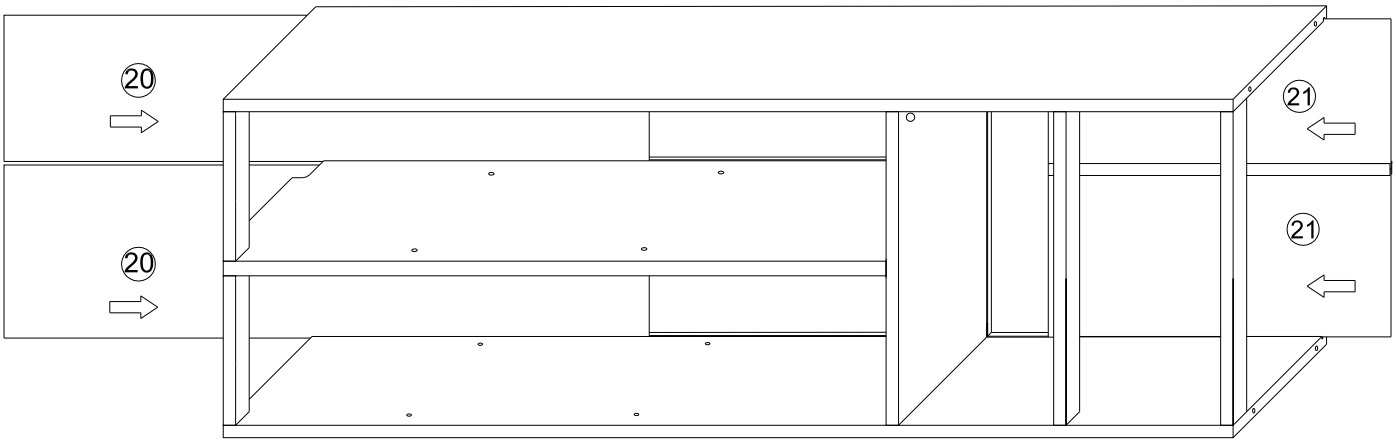

9

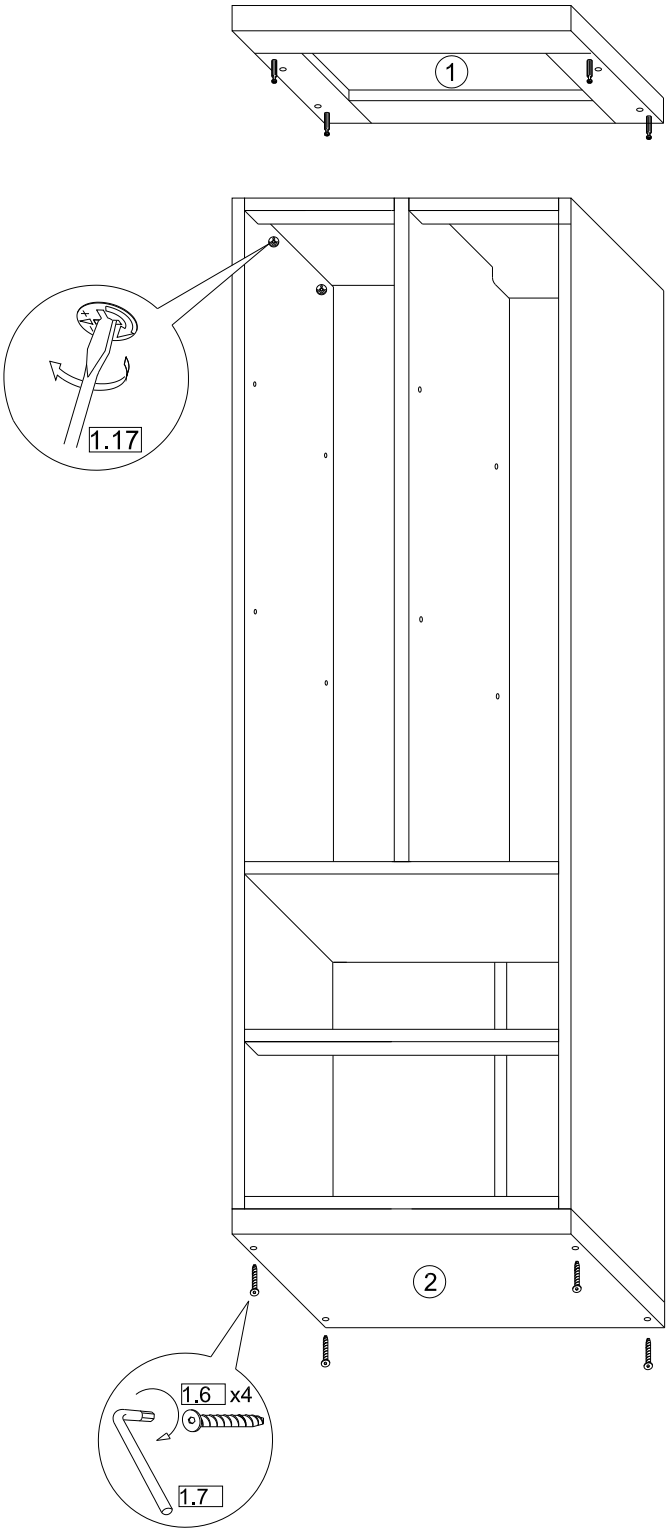

10

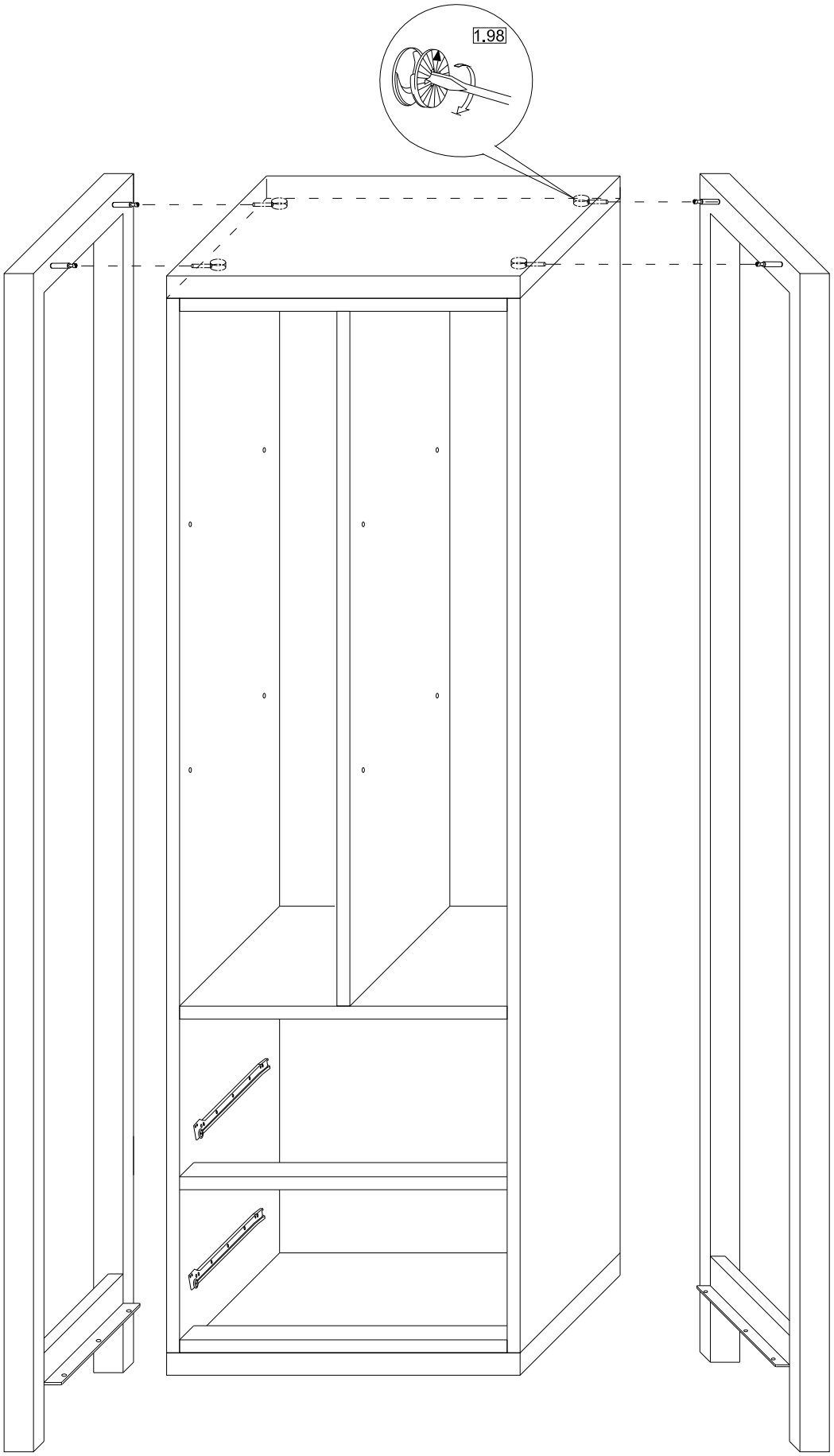

11

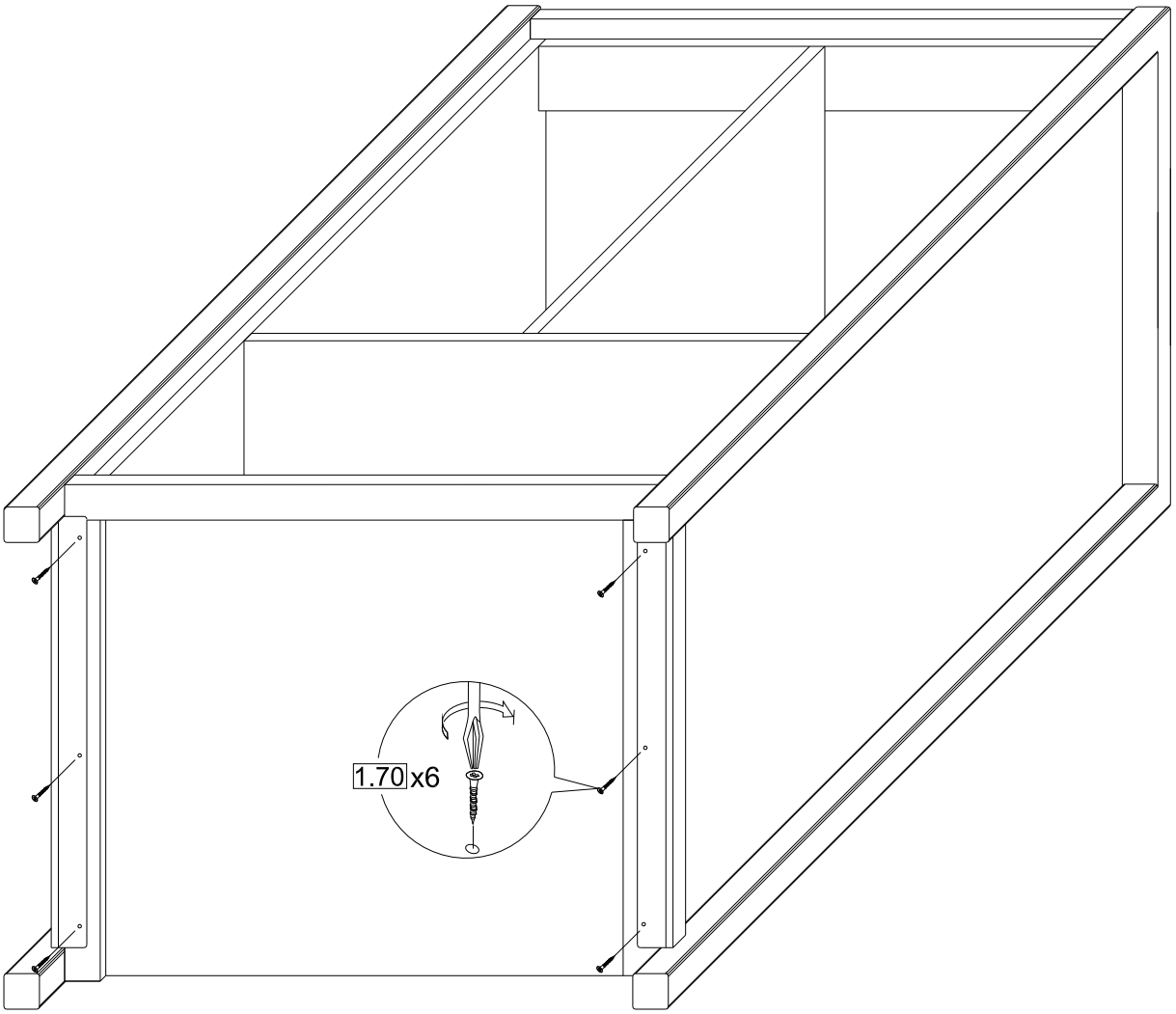

12

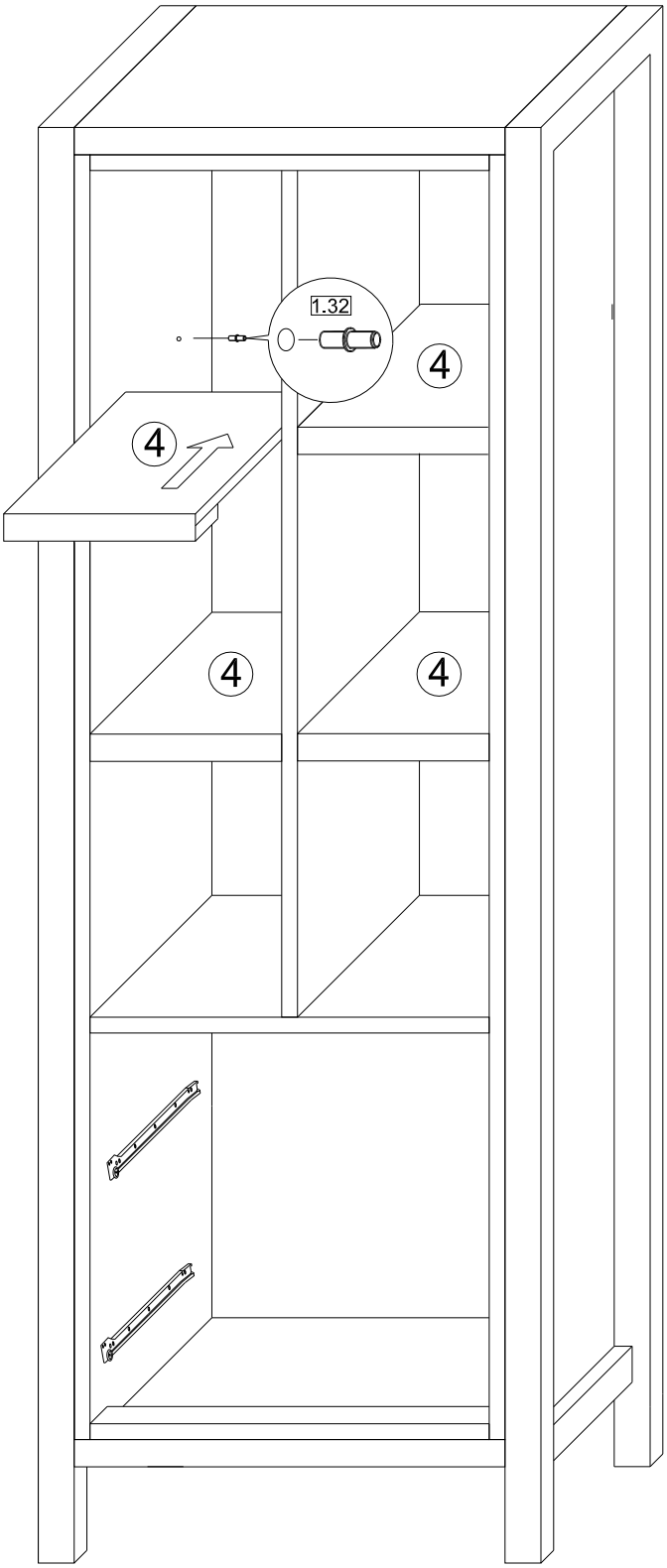

13 x2

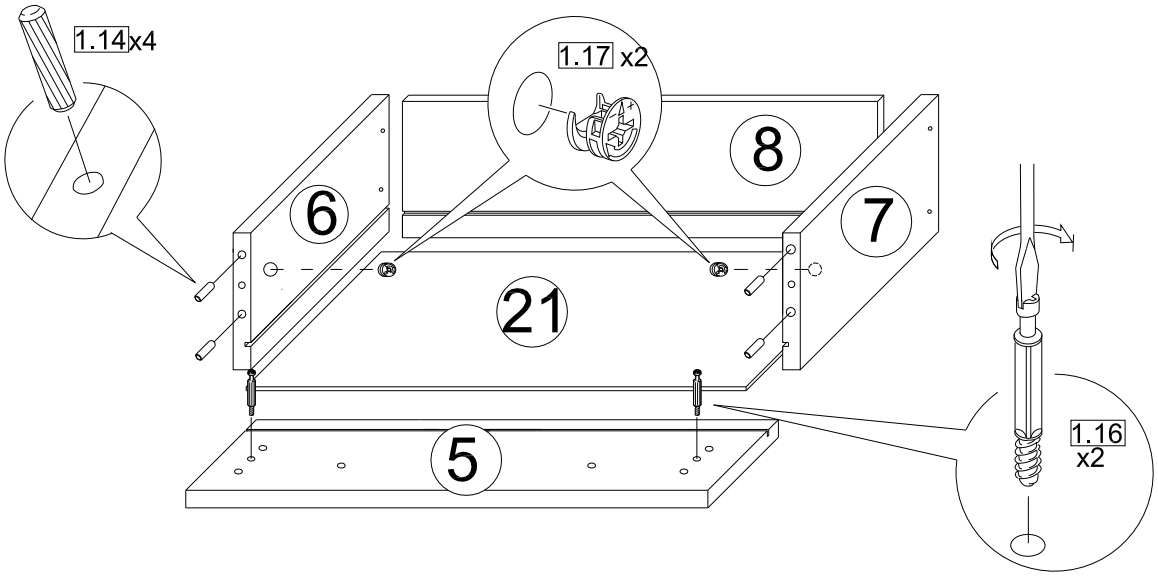

14 x2

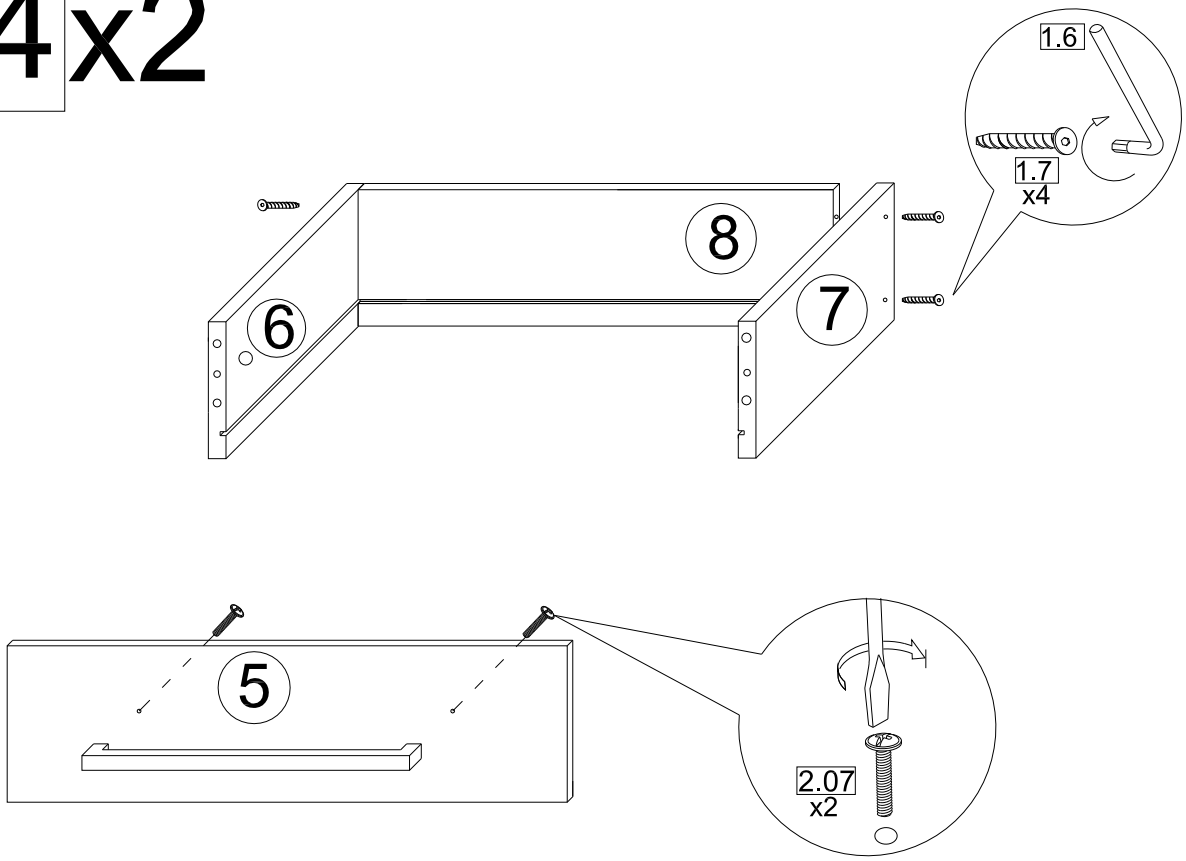

15x2

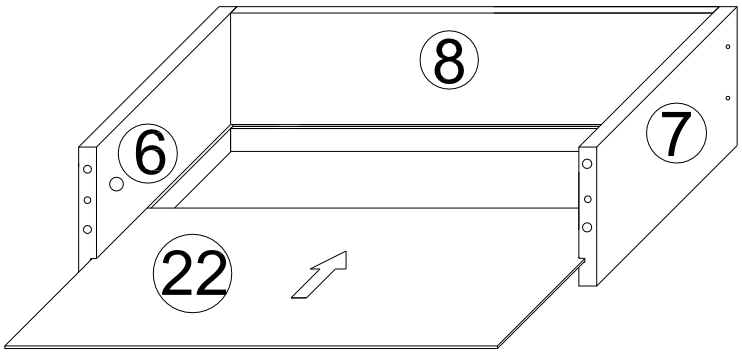

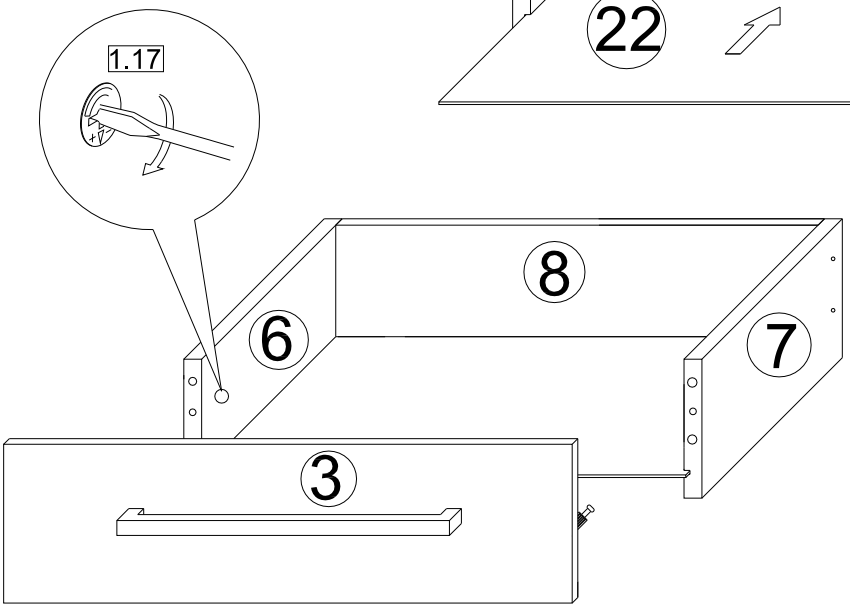

16x2

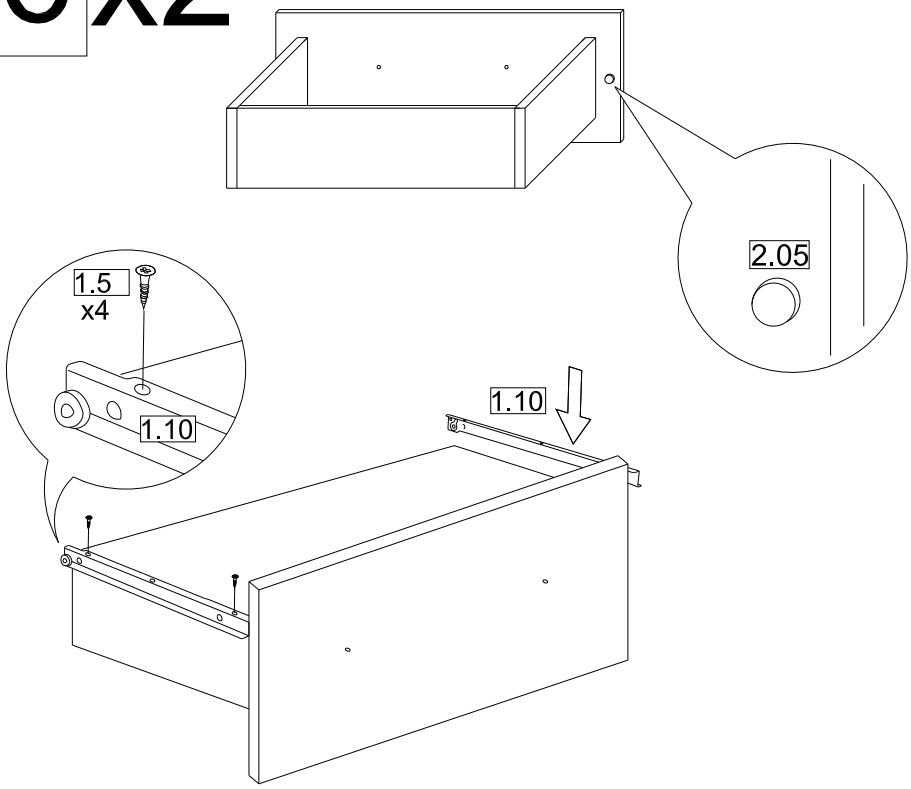

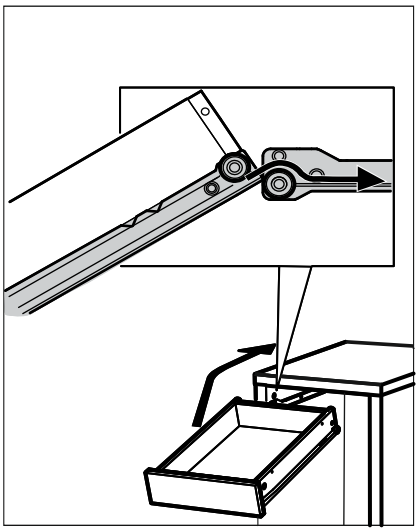

17

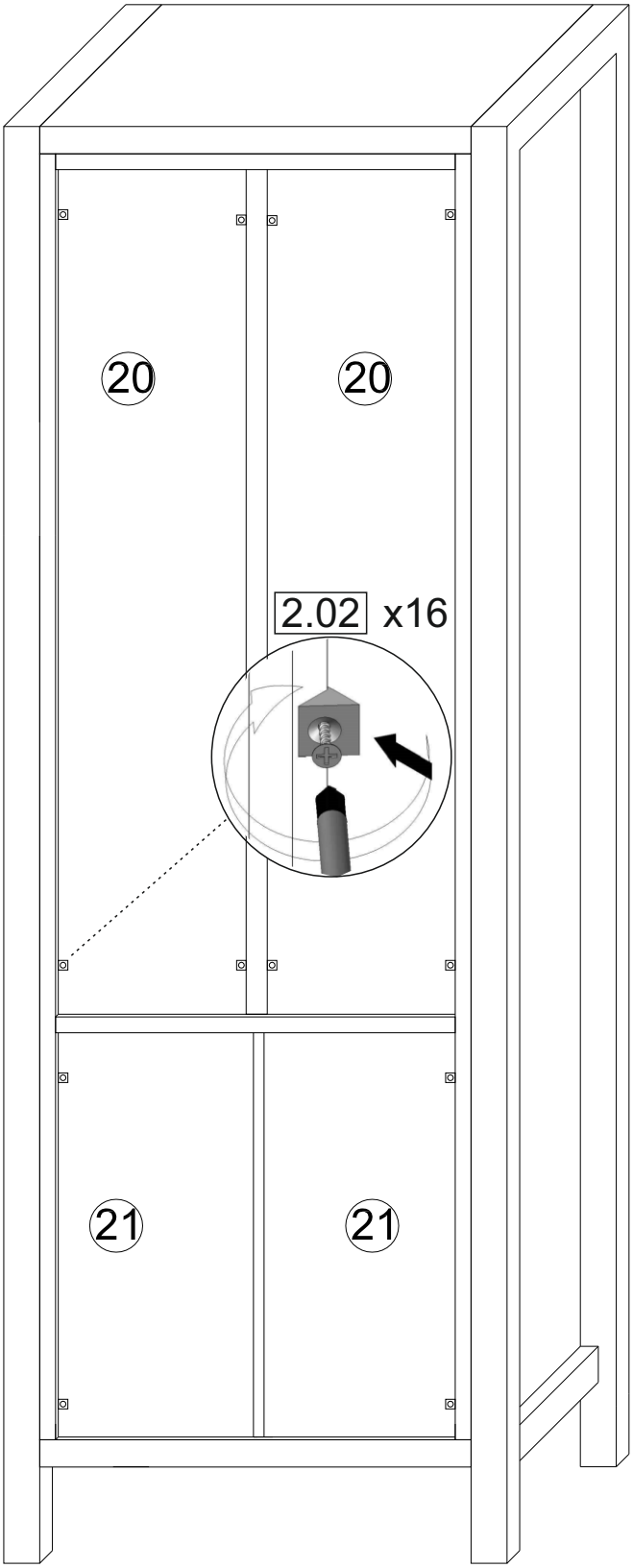

GB Urgent advice:
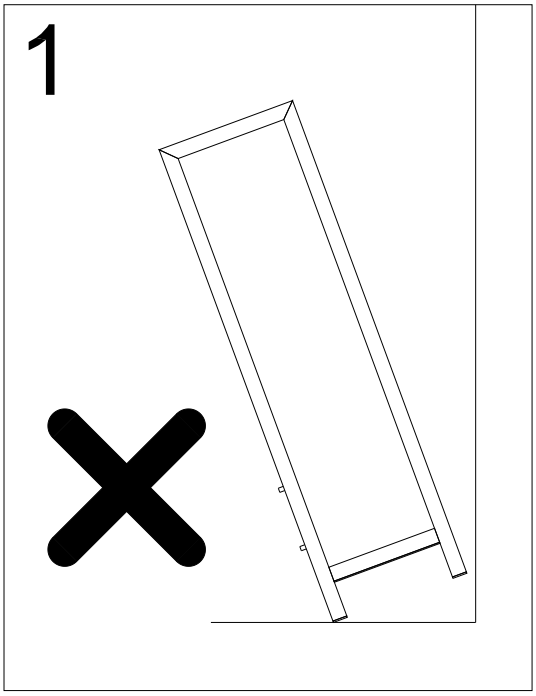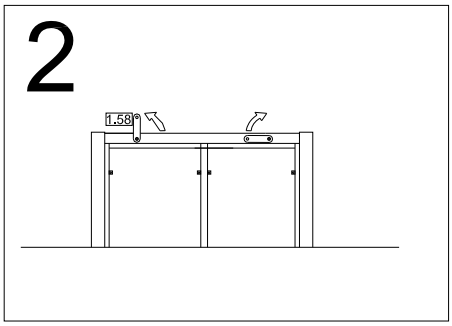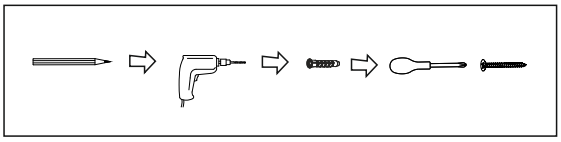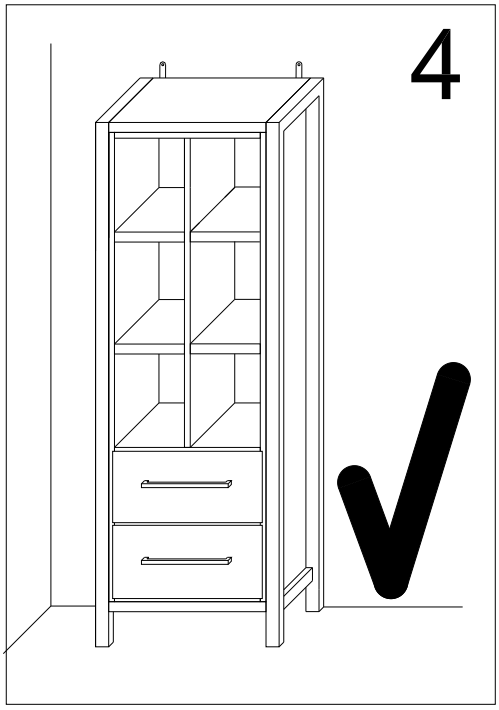
If you have bought a high wall cabinet, we ask you to first flatten the furniture at the desired location and then fix it to the wall with the pre-assembled strips. This to prevent possible tilting of the cabinet and preventing anyone to get injured. Plugs and screws for mounting the cabinet to the wall, are not included because the kind of plugs and screws you need is depending on the type of wall. We recommend to buy it from your local hardware store and ask for advice if necessery. After drawing and drilling (whit the right drill) , place the plug before screwing the strip. Prevent incorrect assembly or injury of any kind.